(VIETMOBILE.VN)

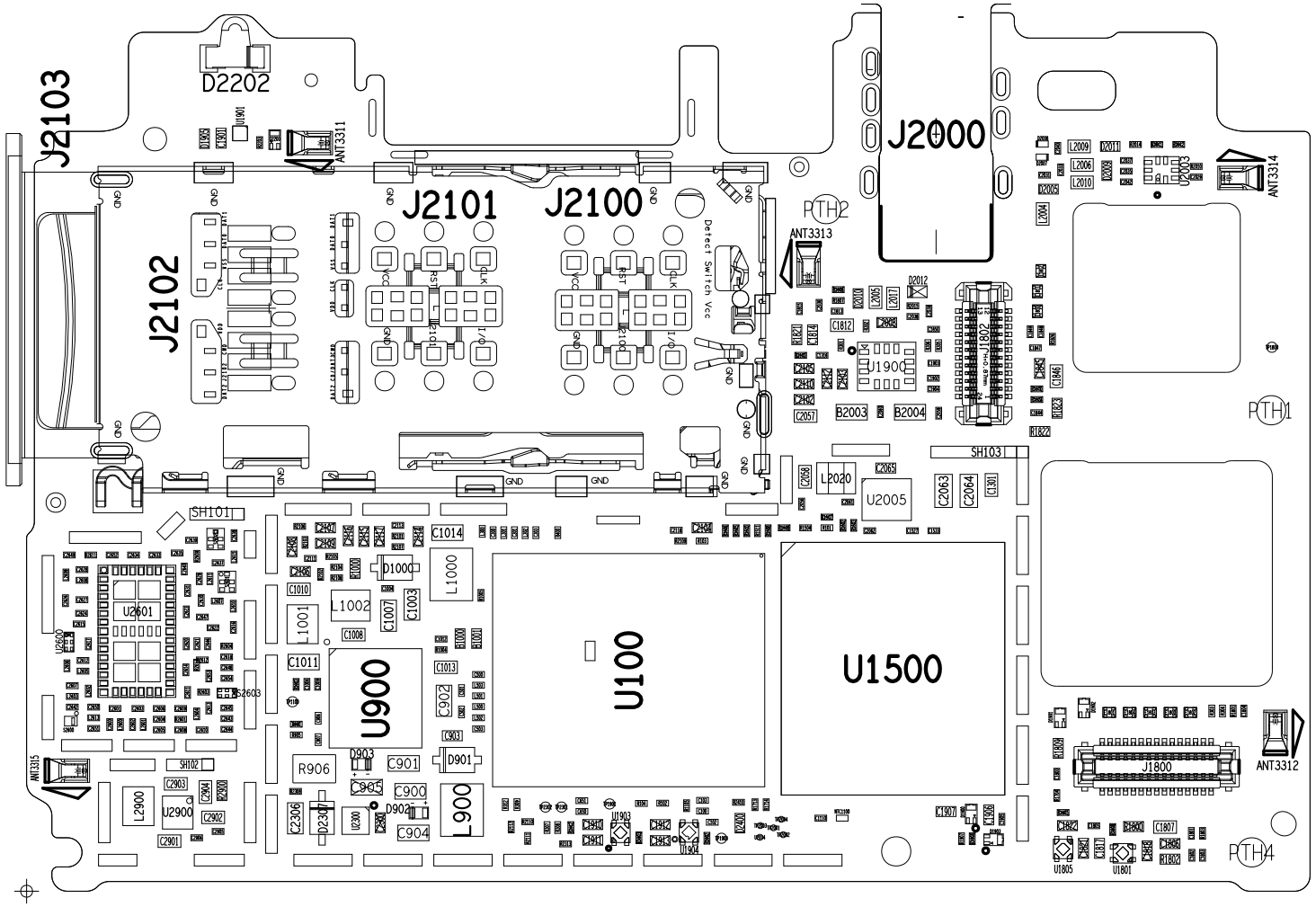

(VIETMOBILE.VN)

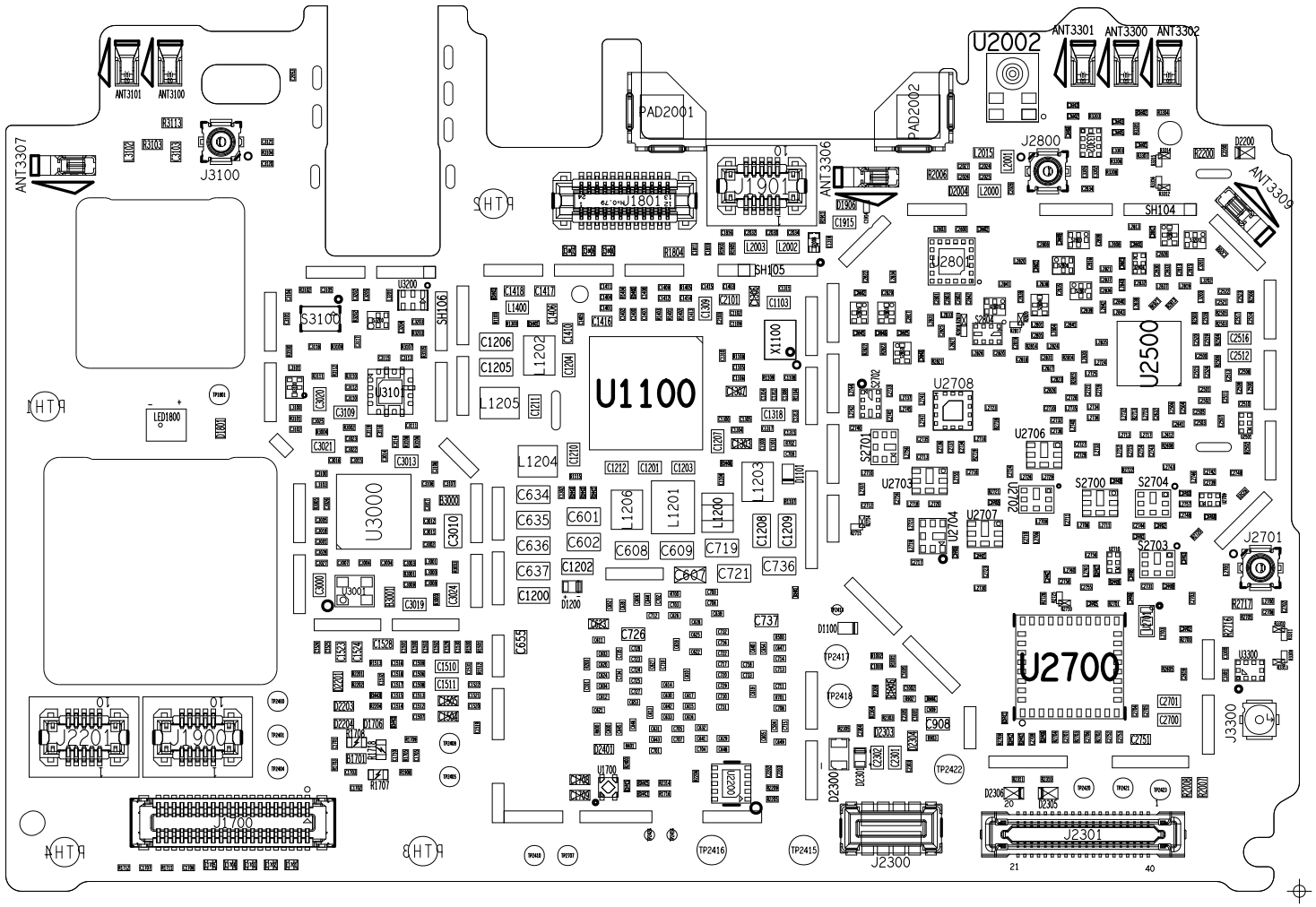

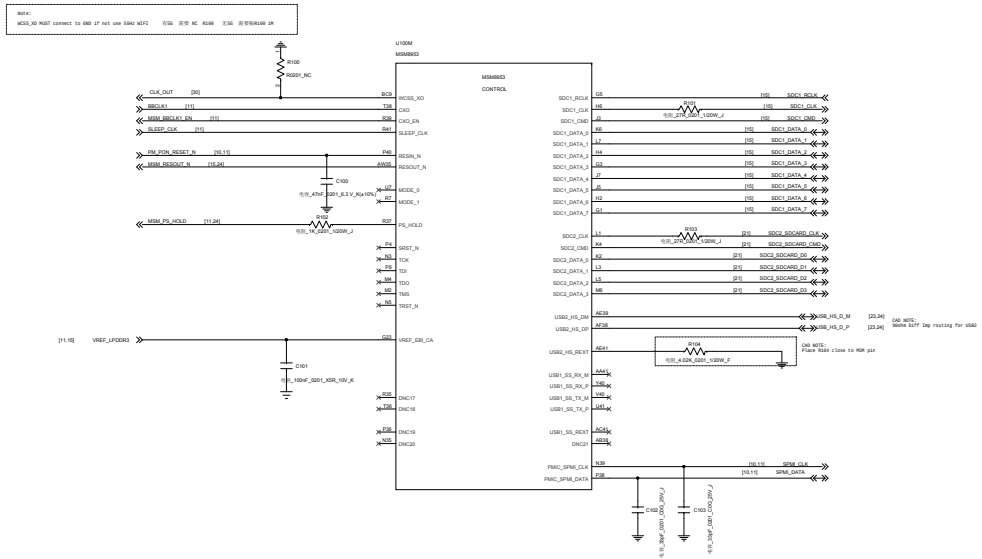

屏蔽罩

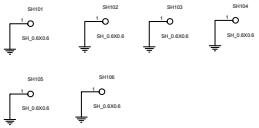

螺丝孔

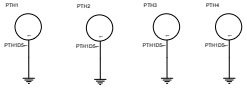

Title	E7_MB_V1	
Size D	Document Number: <Doc> MSM8953 Control	Rev V1.0

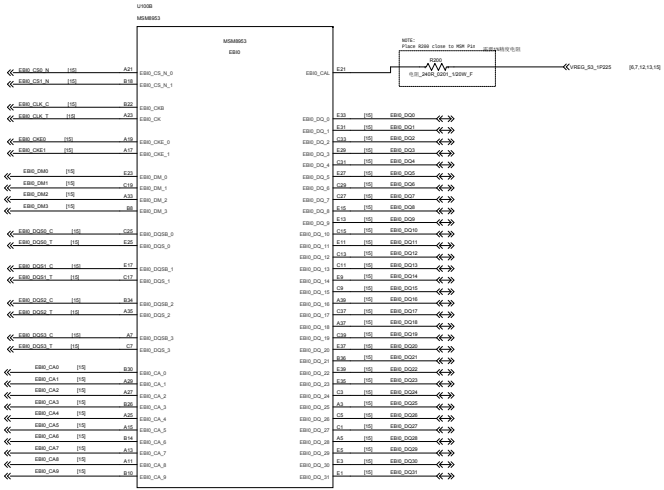

Title	E7_MB_V1	
Size D	Document Number <Doc> MSM8953 EBI	Rev V1.0

NOTE:
Asterisks (*) indicate modem power management (MPM) wake-up pins

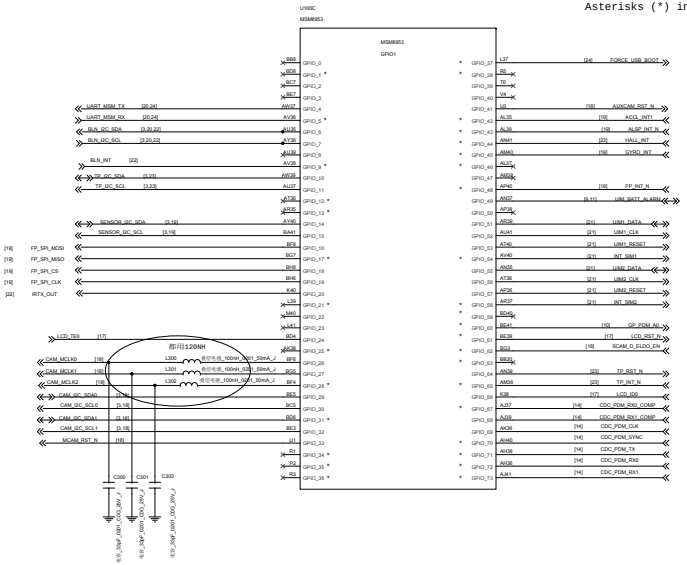

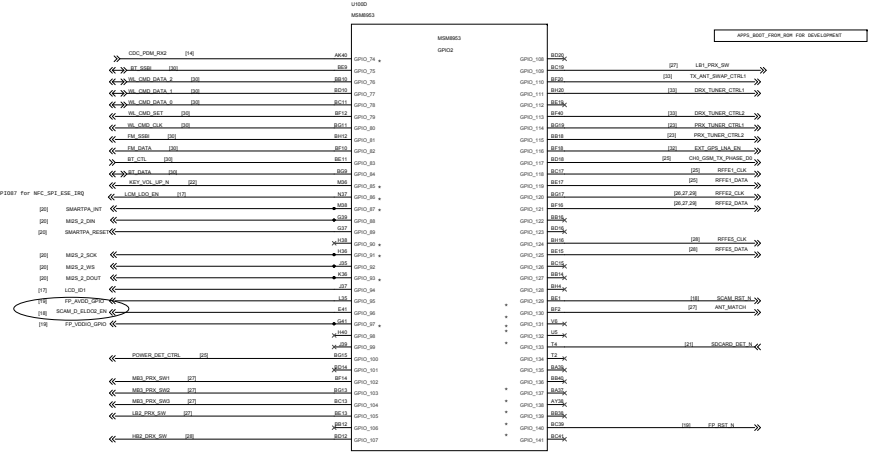

GPIO_37	FORCED_USB_BOOT
GPIO_106	WDOG_DISABLE
GPIO_108	APPS_BOOT_FROM_ROM

BOOT_CONFIG[3:1]	BOOT_CONFIG
00000	SDC1 -> SDC2 -> USB2.0
00001	SDC2 -> SDC1-> USB2.0
00010	SDC1-> USB2.0
00011	USB2.0

Default Boot Config (00000) is SDC1(eMMC)

I2C PULL-UP RESISTORS

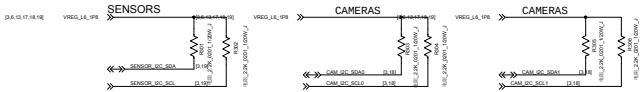

NOTE:
Ensure SW sets these GPIOs (Sensor, CTP and Camera I2C bus) to inout pull down when the peripherals are powered off to eliminate leakage.

File	E7_MB_V1		
Size	Document Number		Rev
D	<Doc>	MSM8953 GPIO	V1.0

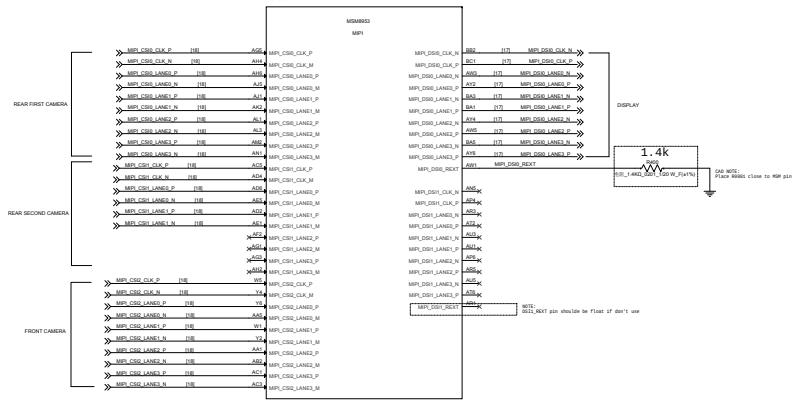

CSI Pin Name	CSI DPHY 4-lane	CSI DPHY 2+1 Mode	CSI CPHY 3Phase Mode
CSI0_3PHASE_PIN0	CSI0_CLKP	CSI0_2LANE_CLKP	NC
CSI0_3PHASE_PIN1	CSI0_CLKN	CSI0_2LANE_CLKN	CSI0_TRI0_A
CSI0_3PHASE_PIN2	CSI0_DP0	CSI0_2LANE_DP0	CSI0_TRI0_B
CSI0_3PHASE_PIN3	CSI0_DN0	CSI0_2LANE_DN0	CSI0_TRI0_C
CSI0_3PHASE_PIN4	CSI0_DP1	CSI0_2LANE_DP1	CSI0_TRI1_A
CSI0_3PHASE_PIN5	CSI0_DN1	CSI0_2LANE_DN1	CSI0_TRI1_B
CSI0_3PHASE_PIN6	CSI0_DP2	CSI0_1LANE_DP0	CSI0_TRI1_C
CSI0_3PHASE_PIN7	CSI0_DN2	CSI0_1LANE_DN0	CSI0_TRI2_A
CSI0_3PHASE_PIN8	CSI0_DP3	CSI0_1LANE_CLKP	CSI0_TRI2_B
CSI0_3PHASE_PIN9	CSI0_DN3	CSI0_1LANE_CLKN	CSI0_TRI2_C
CSI1_3PHASE_PIN0	CSI1_CLKP	CSI1_2LANE_CLKP	NC
CSI1_3PHASE_PIN1	CSI1_CLKN	CSI1_2LANE_CLKN	CSI1_TRI0_A
CSI1_3PHASE_PIN2	CSI1_DP0	CSI1_2LANE_DP0	CSI1_TRI0_B
CSI1_3PHASE_PIN3	CSI1_DN0	CSI1_2LANE_DN0	CSI1_TRI0_C
CSI1_3PHASE_PIN4	CSI1_DP1	CSI1_2LANE_DP1	CSI1_TRI1_A
CSI1_3PHASE_PIN5	CSI1_DN1	CSI1_2LANE_DN1	CSI1_TRI1_B
CSI1_3PHASE_PIN6	CSI1_DP2	CSI1_1LANE_DP0	CSI1_TRI1_C
CSI1_3PHASE_PIN7	CSI1_DN2	CSI1_1LANE_DN0	CSI1_TRI2_A
CSI1_3PHASE_PIN8	CSI1_DP3	CSI1_1LANE_CLKP	CSI1_TRI2_B
CSI1_3PHASE_PIN9	CSI1_DN3	CSI1_1LANE_CLKN	CSI1_TRI2_C
CSI2_3PHASE_PIN0	CSI2_CLKP	CSI2_2LANE_CLKP	NC
CSI2_3PHASE_PIN1	CSI2_CLKN	CSI2_2LANE_CLKN	CSI2_TRI0_A
CSI2_3PHASE_PIN2	CSI2_DP0	CSI2_2LANE_DP0	CSI2_TRI0_B
CSI2_3PHASE_PIN3	CSI2_DN0	CSI2_2LANE_DN0	CSI2_TRI0_C
CSI2_3PHASE_PIN4	CSI2_DP1	CSI2_2LANE_DP1	CSI2_TRI1_A
CSI2_3PHASE_PIN5	CSI2_DN1	CSI2_2LANE_DN1	CSI2_TRI1_B
CSI2_3PHASE_PIN6	CSI2_DP2	CSI2_1LANE_DP0	CSI2_TRI1_C
CSI2_3PHASE_PIN7	CSI2_DN2	CSI2_1LANE_DN0	CSI2_TRI2_A
CSI2_3PHASE_PIN8	CSI2_DP3	CSI2_1LANE_CLKP	CSI2_TRI2_B
CSI2_3PHASE_PIN9	CSI2_DN3	CSI2_1LANE_CLKN	CSI2_TRI2_C

File	E7_MB_V1	
Size: D	Document Number: <Doc> MSM8953 MIPI	Rev: V1.0

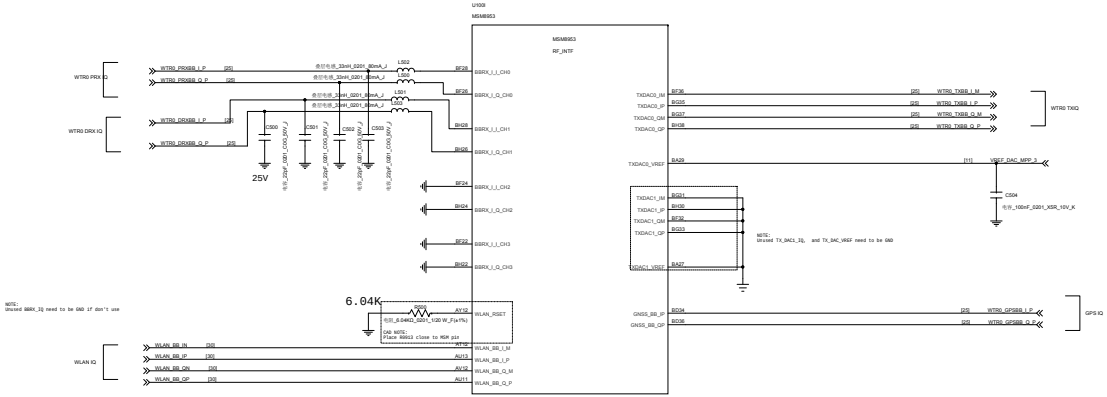

Title	E7_MB_V1	
Size D	Document Number <Doc> MSM8953 RF	Rev V1.0

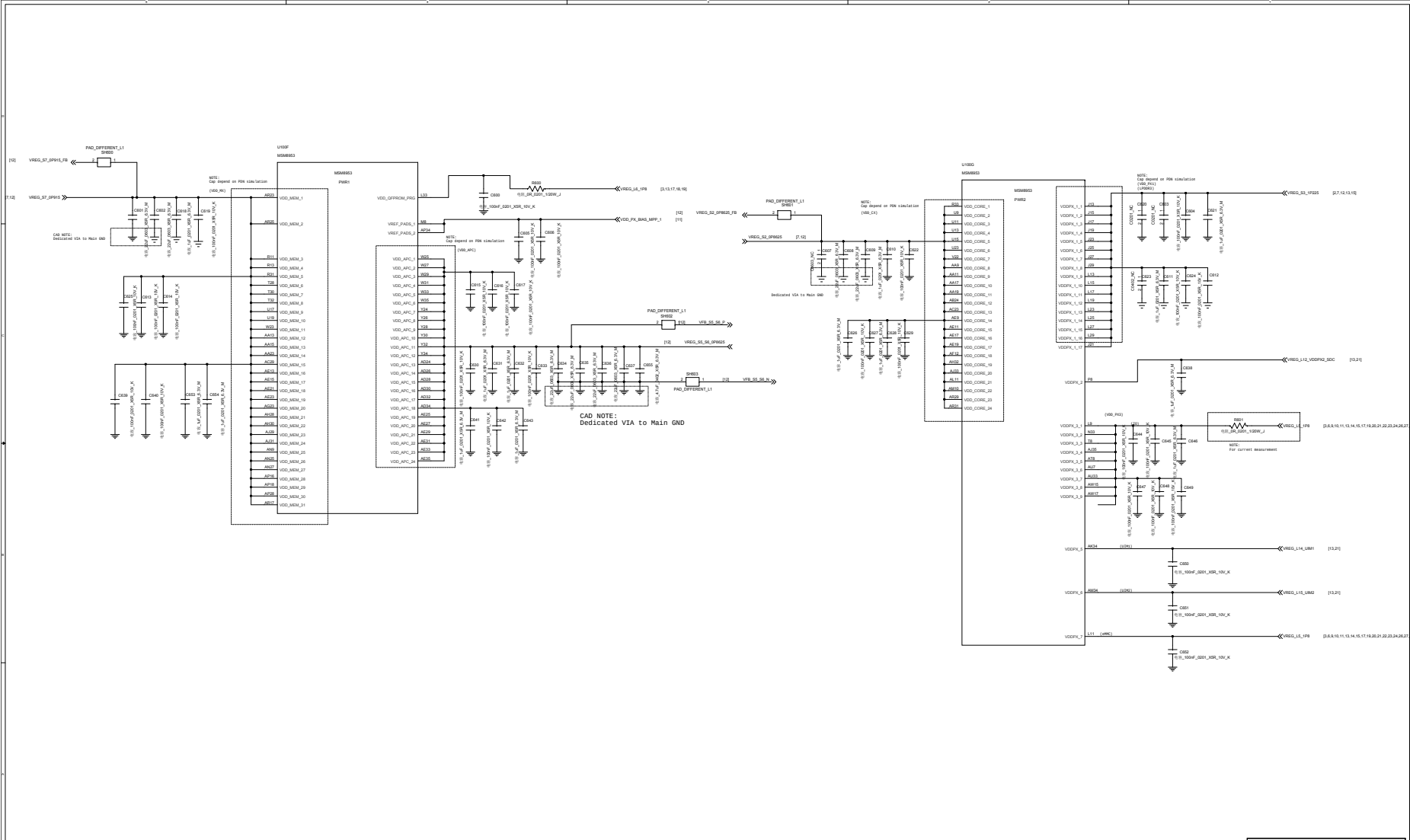

File	E7_MB_V1
Size D	Document Number <Doc> MSM8953 POWER1
	Rev V1.0

CAD NOTE:
About star route from PMIC output Cap:

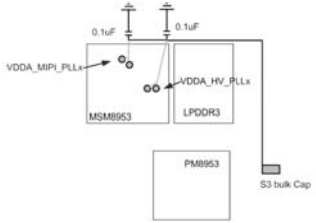

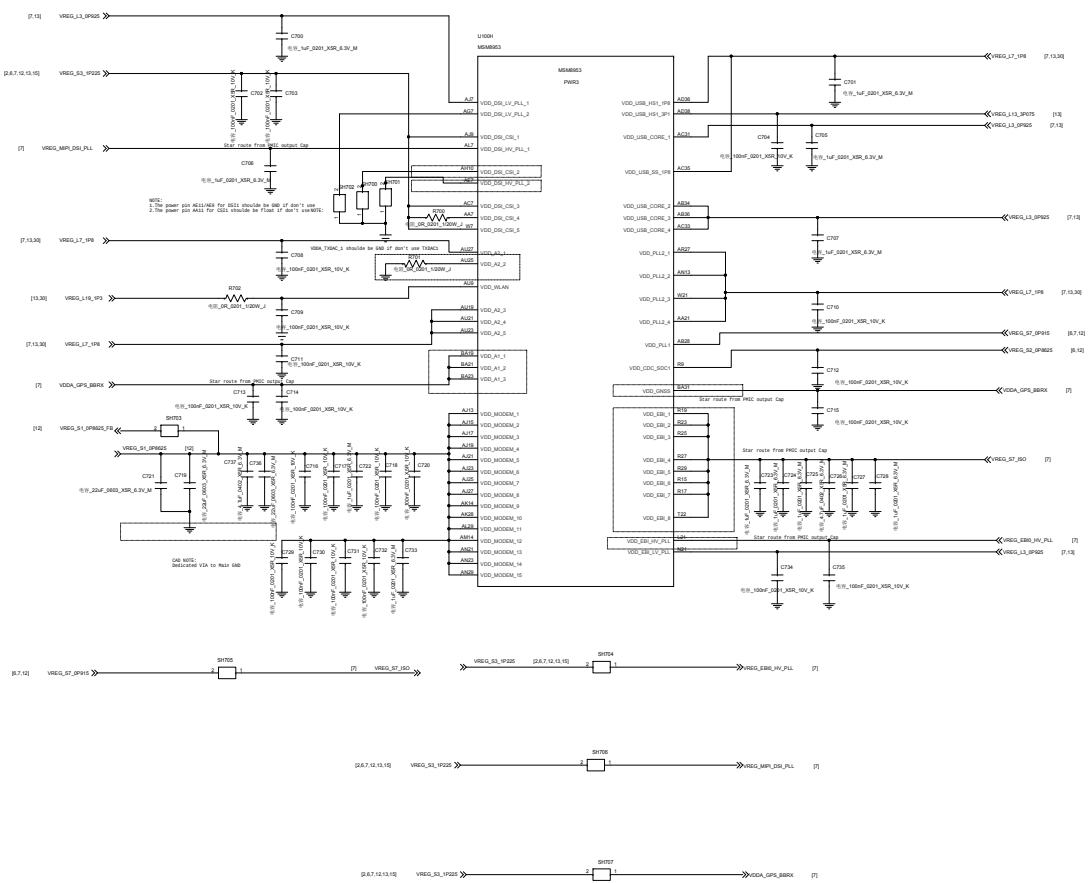

File: E7_MB_V1			
Size: D	Document Number: <Doc>	MSM8953 POWER2	Rev: V1.0

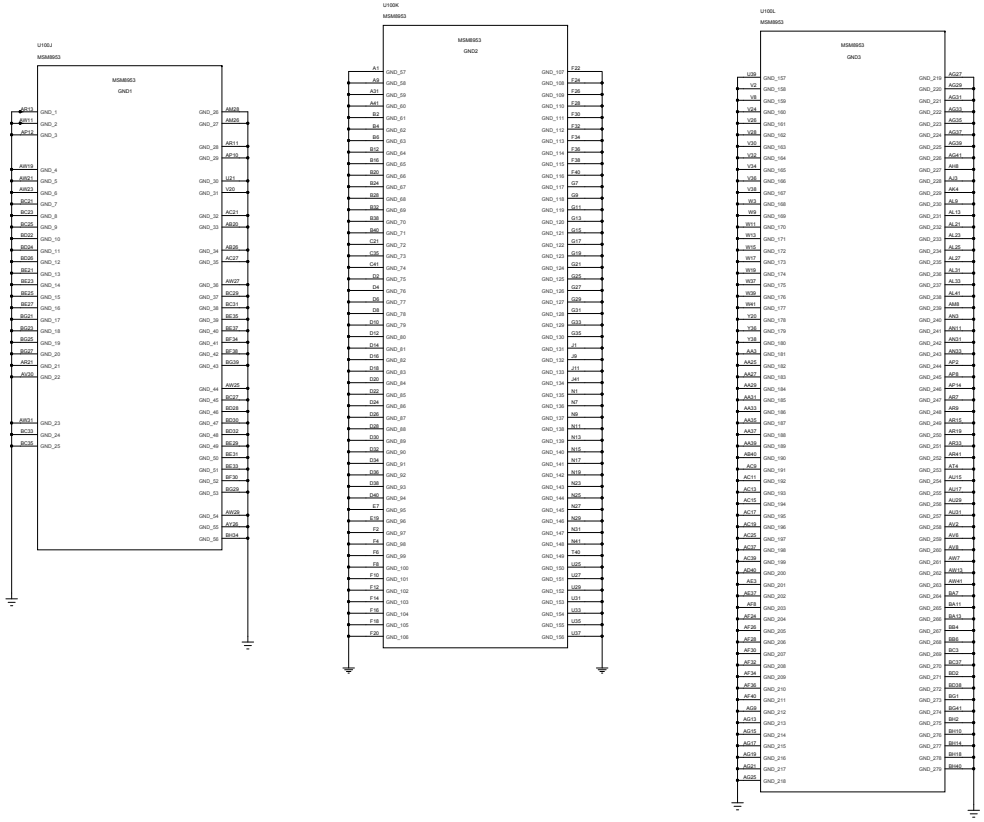

File	E7_MB_V1		
Size D	Document Number <Doc>	MSM8953 GND	Rev V1.0

PM_PIN	connection on device without Wipower	connection on device with Wipower
CHG_EN	Pull up to VDD_CAP with 1kohm	Stark PRU CHG_EN
DVS2_EN	Pull down to GND with 8ohm	Stark PRU DVS2_EN
WPOC	NO CONNECT For parallel charging: Connects to SMB EN pin. Do NOT pull up to VDD_CAP	100KOHM pull down to GND For parallel charging: Connects to SMB EN pin. Do NOT pull up to VDD_CAP

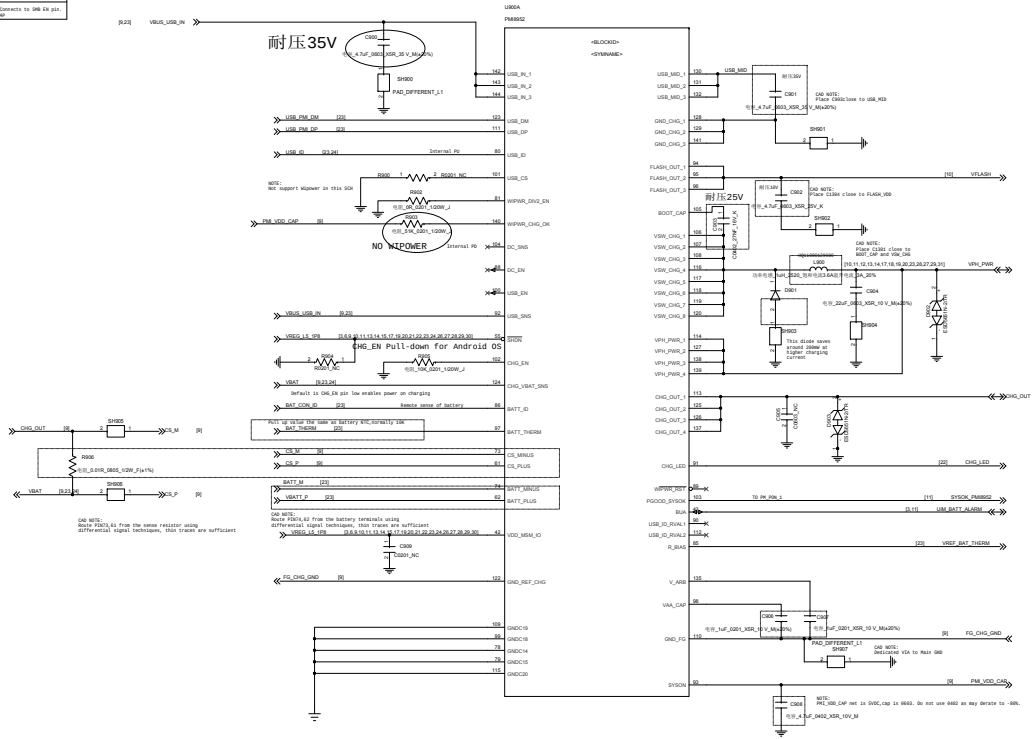

File	E7_MB_V1.0	
Size	Document Number	Rev
D	<Doc> PMI8952 Charger	V1.0

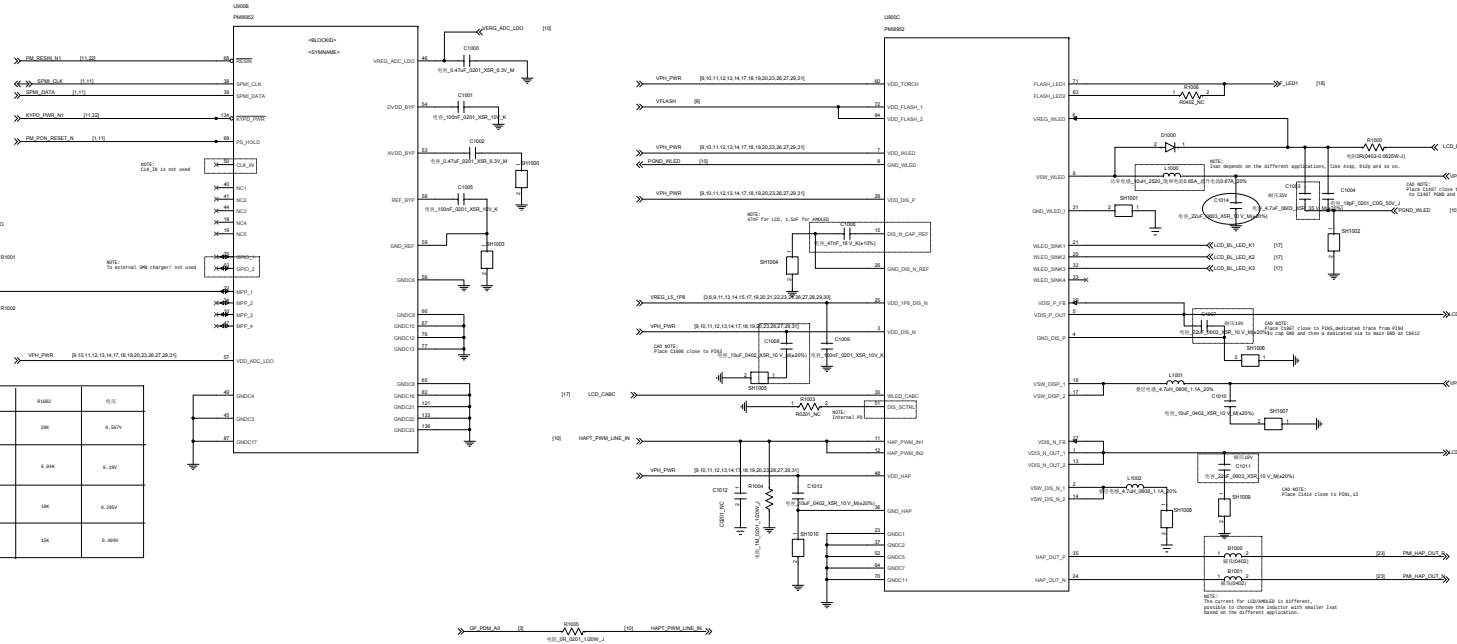

DIS 配置	R1001	R1002	电压
国内版	51K	20K	0.587V
南美版	51K	6.04K	0.19V
东南亚版	51K	10K	0.296V
印度版	51K	15K	0.489V

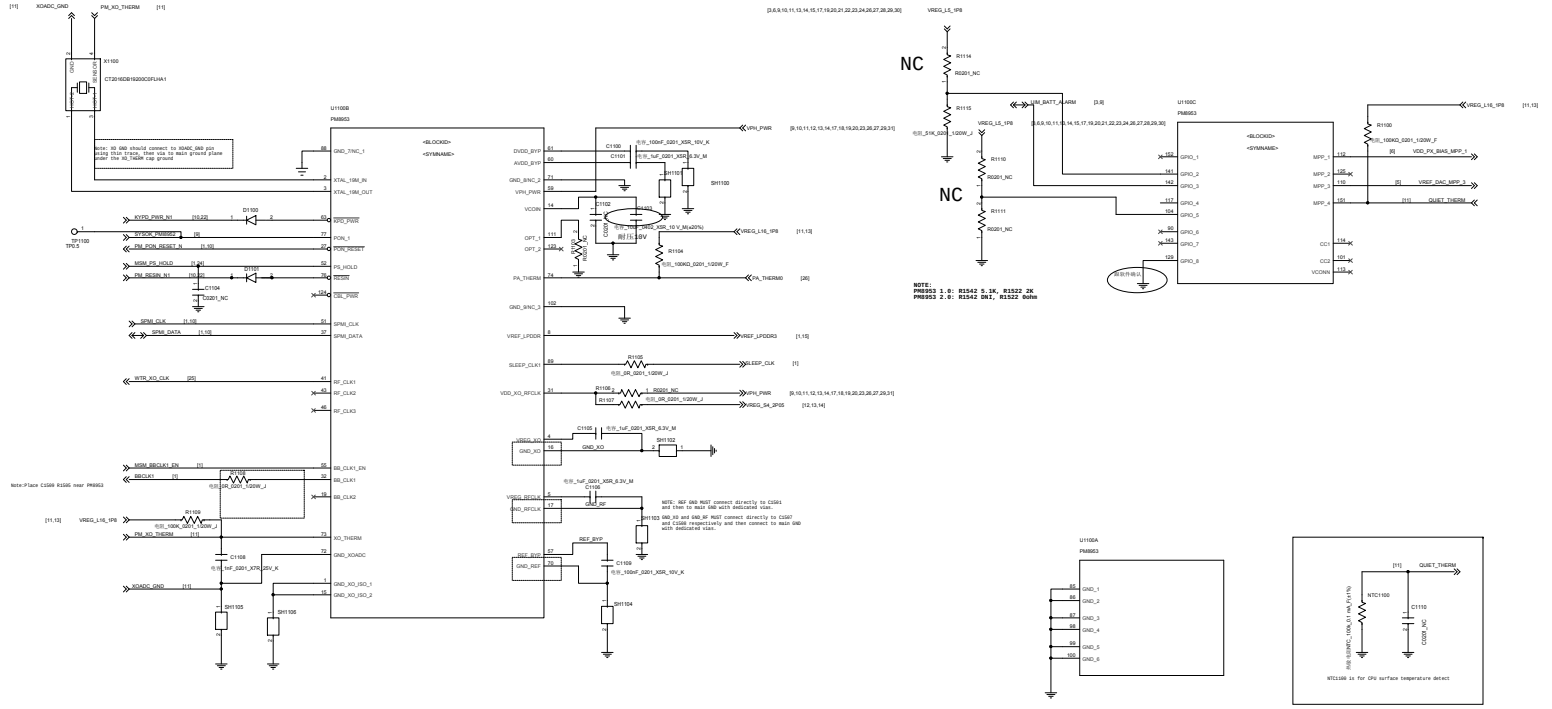

File	E7_MB_V1
Size D	Document Number <Doc> PM8953 ControlInterface
Rev V1.0	

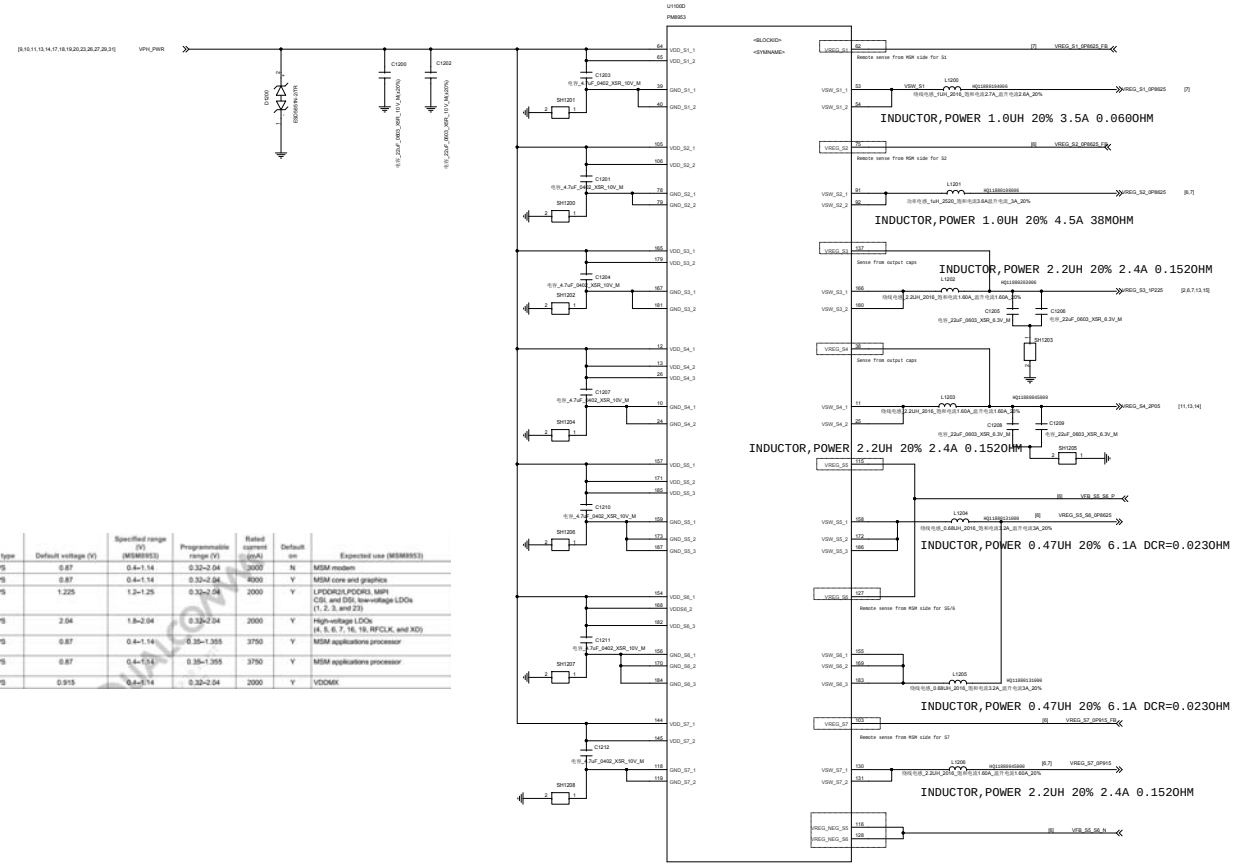

Function	Circuit type	Default voltage (V)	Specified range (V) (MSM8953)	Programmable range (V)	Rated current (mA)	Default on	Expected use (MSM8953)
S1	SMPS	0.87	0.4–1.14	0.32–2.04	3000	N	MSM modem
S2	SMPS	0.87	0.4–1.14	0.32–2.04	4000	Y	MSM core and graphics
S3	SMPS	1.225	1.2–1.25	0.32–2.04	2000	Y	LPDDR2/LPDDR3, MIPI CSI, and DSI, low-voltage LDOs (1, 2, 3, and 23)
S4	SMPS	2.04	1.8–2.04	0.32–2.04	2000	Y	High-voltage LDOs (4, 5, 6, 7, 16, 19, RFCLK, and XO)
S5	SMPS	0.87	0.4–1.14	0.35–1.355	3750	Y	MSM applications processor
S6	SMPS	0.87	0.4–1.14	0.35–1.355	3750	Y	MSM applications processor
S7	SMPS	0.915	0.4–1.14	0.32–2.04	2000	Y	VDDMX

File	E7_MB_V1		
Size D	Document Number <Doc>	PM8953 SMPS	Rev V1.0

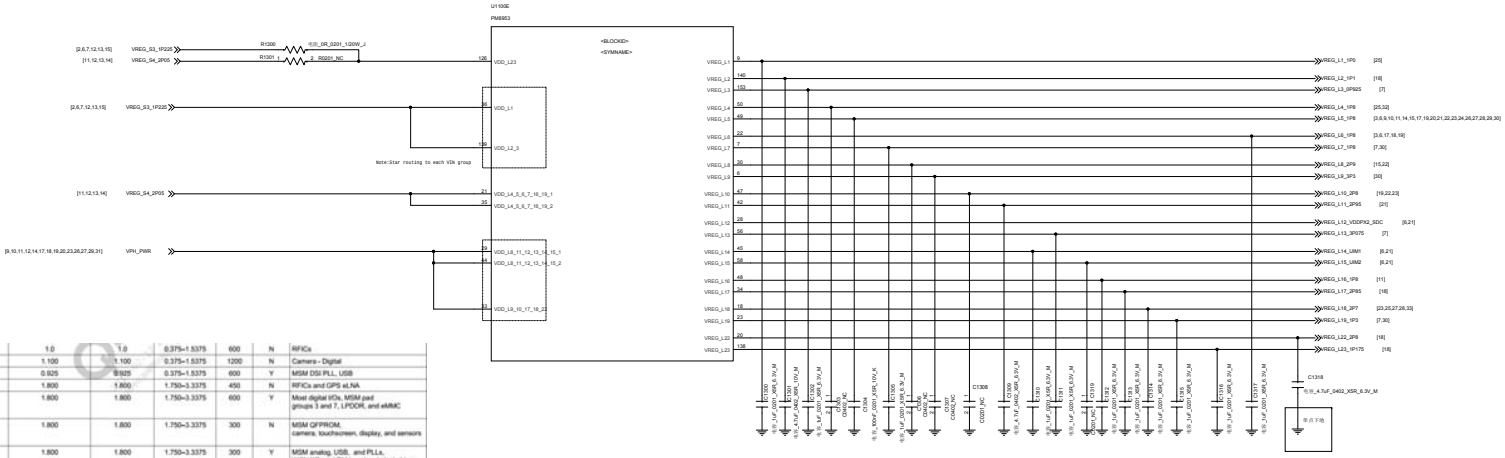

L1	NMOS LDO	1.0	1.0	0.375–1.5375	600	N	RFICs
L2	NMOS LDO	1.100	1.100	0.375–1.5375	1200	N	Camera - Digital
L3	NMOS LDO	0.925	0.925	0.375–1.5375	600	Y	MSM DSI PLL, USB
L4	PMOS LDO	1.800	1.800	1.750–3.3375	450	N	RFICs and GPS eLNA
L5	PMOS LDO	1.800	1.800	1.750–3.3375	600	Y	Most digital I/Os, MSM pad groups 3 and 7, LPDDR, and eMMC
L6	PMOS LDO	1.800	1.800	1.750–3.3375	300	N	MSM QFPROM, camera, touchscreen, display, and sensors
L7	PMOS LDO	1.800	1.800	1.750–3.3375	300	Y	MSM analog, USB, and PLLs, WCN XO, and PM baseband clock driver
L8	PMOS LDO	2.900	2.900	1.750–3.3375	600	Y	eMMC
L9	PMOS LDO	Vout = 3.3 V for VBAT > 3.575 V; Vout = 3 V for VBAT < 3.575 V	3.000–3.300	1.750–3.3375	600	N	WCN

Function	Circuit type	Default V (V)	Specified range (V) (MSM8953)	Programmable range (V)	Rated current (mA)	Default ON	Expected use (MSM8953)
L10	PMOS LDO	3.0	3.0	1.750–3.3375	150	N	Sensors and touchscreen
L11	PMOS LDO	2.950	2.950	1.750–3.3375	800	Y	Micro SD
L12	PMOS LDO	2.950	1.800/2.950	1.750–3.3375	50	Y	MSM pad group 2 and SDC2
L13	PMOS LDO	3.125	3.125	1.750–3.3375	150	Y	MSM USB type C and PMIC and external codec audio
L14	PMOS LDO	1.800	1.800/3	1.750–3.3375	50	N	MSM pad group 5, dual-voltage UIM1, and NFC
L15	PMOS LDO	1.800	1.800/3	1.750–3.3375	50	N	MSM pad group 6 and dual-voltage UIM2
L16	PMOS LDO	1.800	1.800	1.750–3.3375	5	N	PMIC HKADC
L17	PMOS LDO	2.850	2.850	1.750–3.3375	300	N	Camera and display
L18	PMOS LDO	2.700	2.700	1.750–3.3375	150	N	QTI RF front-end
L19	NMOS LDO	1.300	1.300	0.375–1.5375	600	N	MSM analog, WCN, and WGR
L20	Low-noise LDO	1.74	1.74	1.74–3.3375	5	Y	PMIC XO circuits
L21	Low-noise LDO	1.74	1.74	1.74–3.3375	5	N	PMIC RF clock buffers
L22	PMOS LDO	2.800	2.800	1.750–3.3375	150	N	Camera – analog
L23	NMOS LDO	1.15	1.15	0.375–1.5375	600	N	Camera - digital

QUALCOMM

Title	E2_MB_V1	
Size D	Document Number <Doc> PM8953 LDO	Rev V1.0

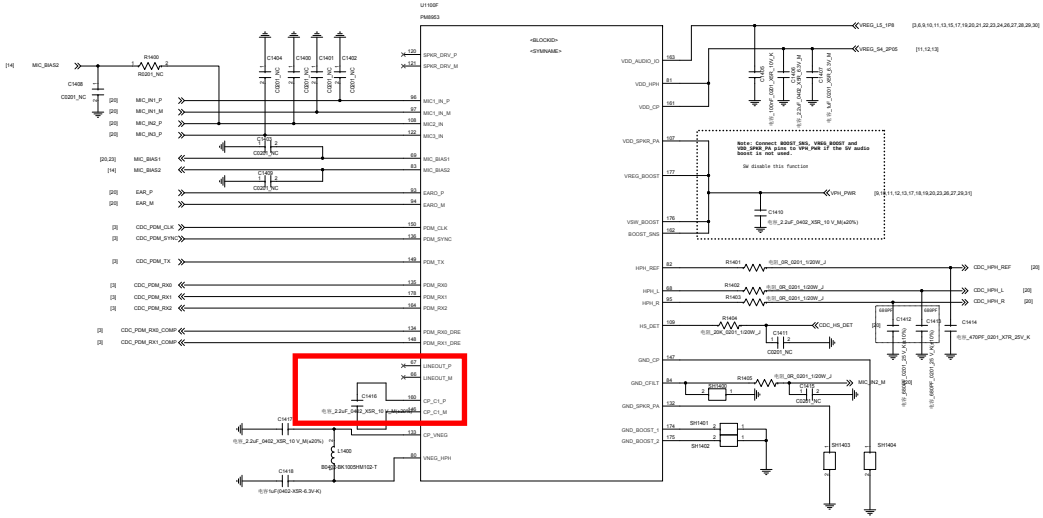

Title	E7_MB_V1
Size D	Document Number <Doc> PM8953 CODEC/Audio PA
Rev V1.0	

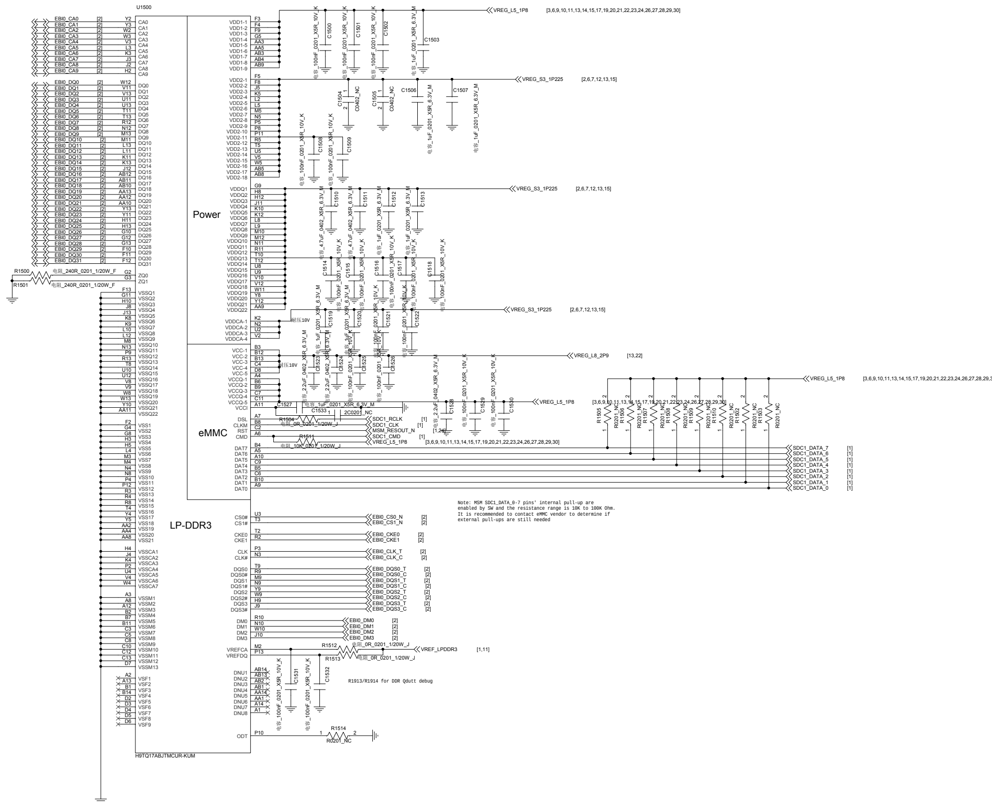

Title: E7_MB_V1

Size: D | Document Number: <Doc> MEMORY(LPDDR3+EMMC V5.1) | Rev: V1.0

Date: Wednesday, February 28, 2018 | Sheet 15 of 34

Note: If best EMI practices are followed for MIPI CSI/DSI signals, there is no need for common mode choke filters. You may choose to have placeholders for common mode depending upon your design constraints.
Extreme care must be taken that no stubs are created by doing so.

厂家	ID
一供天马	ID0=0, ID1=0
二供深超	ID0=0, ID1=1

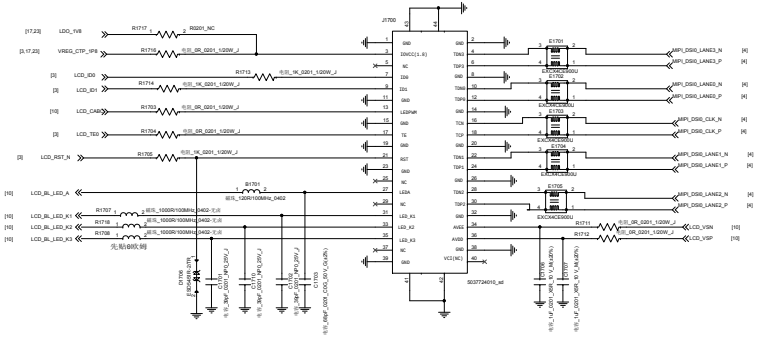

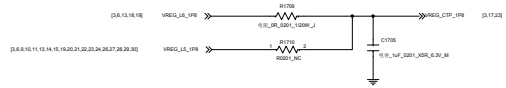

NC 预留 1.8V

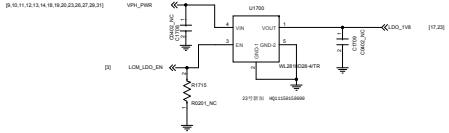

File	E7_MB_V1
Size D	Document Number <Doc> LCD/CTP Rev V1.0

Main MONO Camera 12M

厂家	I2C READ	I2C WRITE	ID
舜宇	0X 21	0X 20	
欧菲光	0X 21	0X 20	

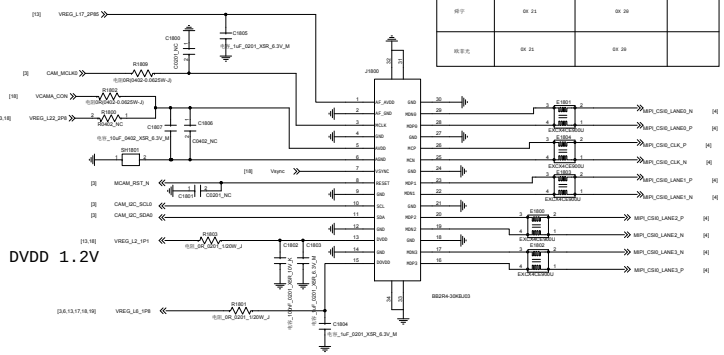

AUX Camera 5M

厂家	I2C READ	I2C WRITE	ID
舜宇	0X 5A	0X 5B	
欧菲光	0X 5A	0X 5B	

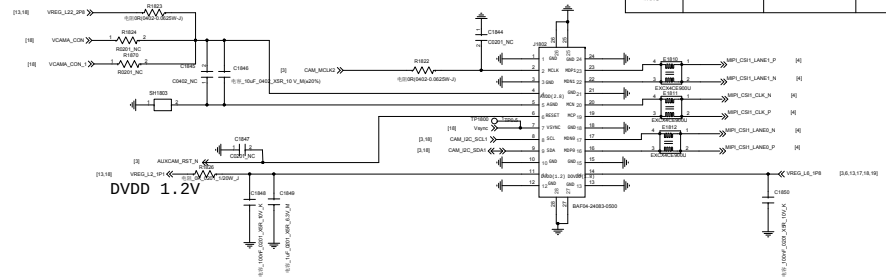

Front Camera 5M

厂家	I2C READ	I2C WRITE	ID
江铃微	0X 21	0X 20	
欧菲光	0X 6C	0X 60	

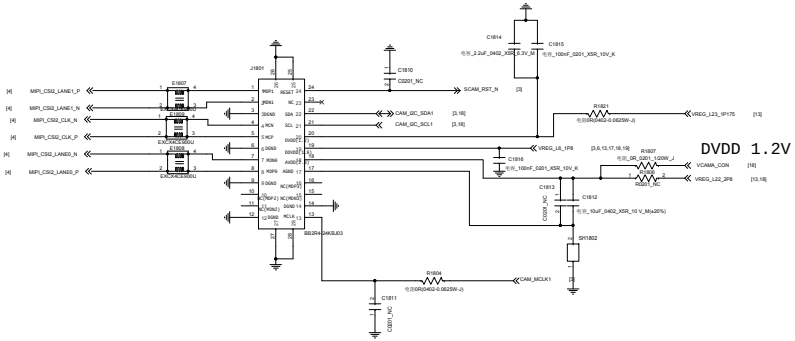

Rear Camera Flash

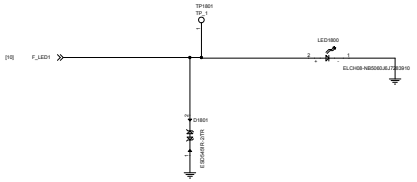

AVDD LDO

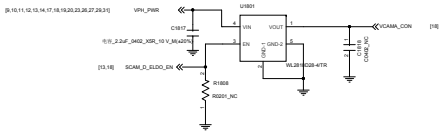

DVDD LDO

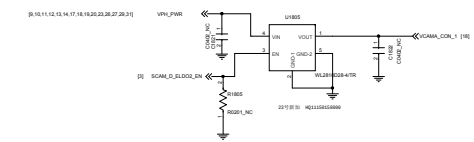

1-wire Pulse Configurable,Max current 200mA.
12.5mA per step .Total 16 STEP.

File	E7_MB_V1		
Size D	Document Number <Rev>		Rev V1.0

E-compass

厂家	I2C ADDRESS
AK09918C	0ch

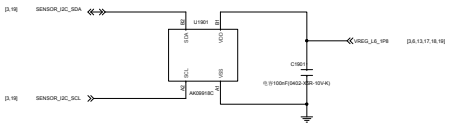

Gyro+A sensor

厂家	I2C ADDRESS
BMI120	0x68

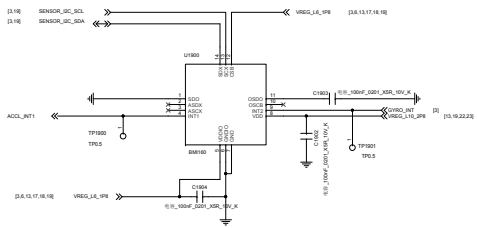

ALS PS

使用BTB方式

厂家	I2C ADDRESS
LTR-578ALS-WA	0X53h

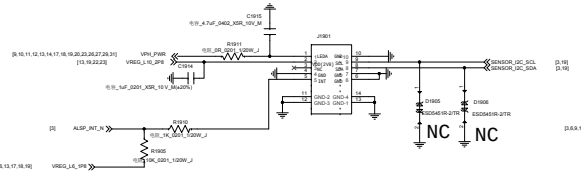

Finger Print

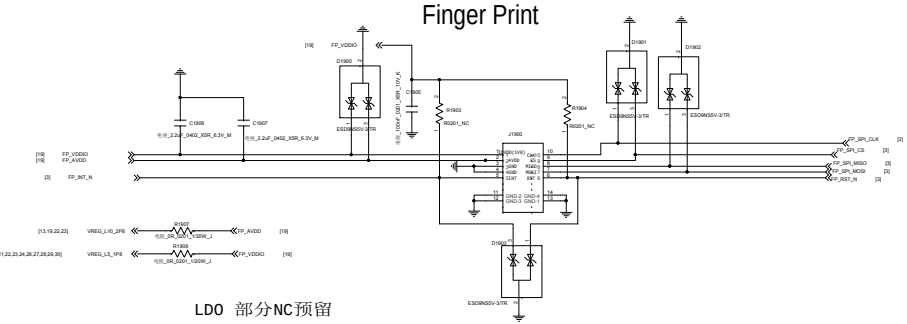

LDO 部分NC预留

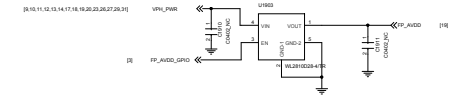

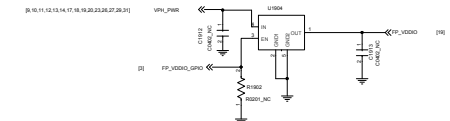

Title	E2_MB_V1	
Size D	Document Number <Doc>	Rev V1.0

AUDIO PA

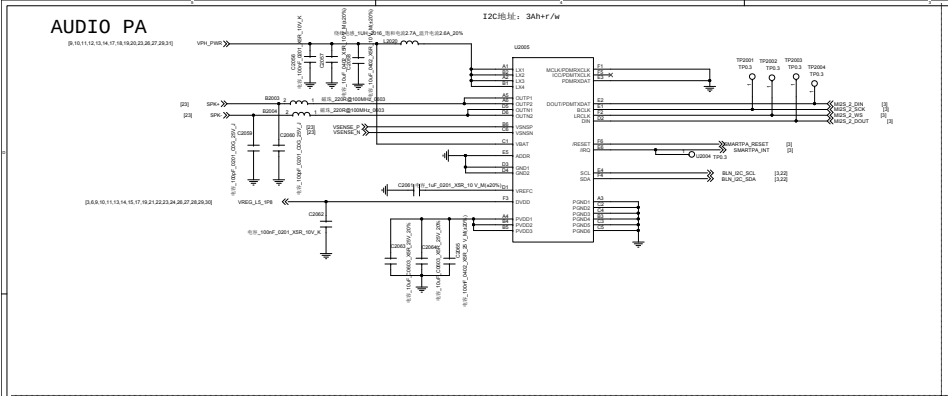

MIC -- Sub

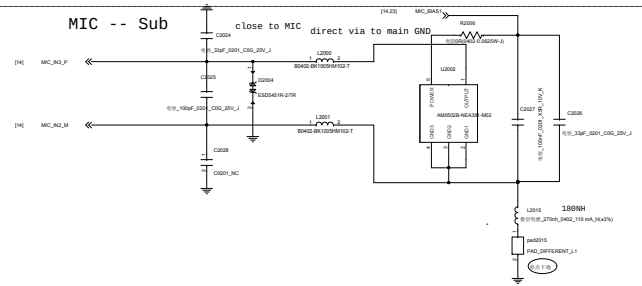

MIC -- Main

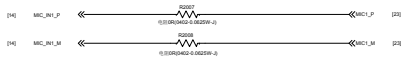

American Standard EARPHONE

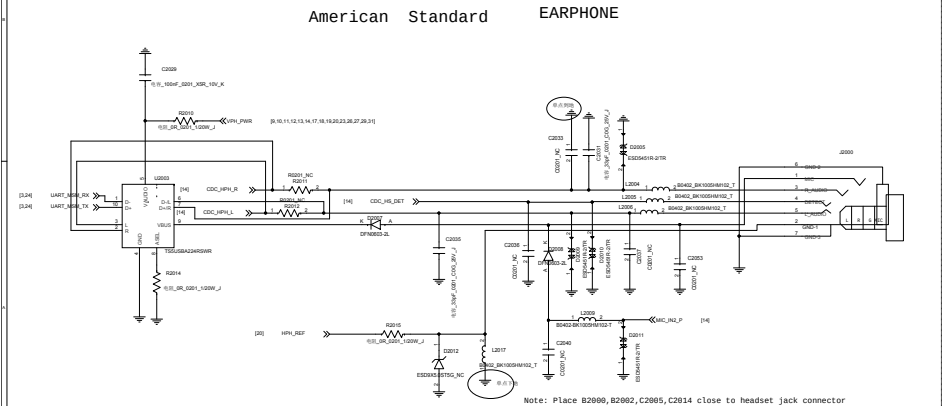

Note: Place B2000,B2002,C2005,C2014 close to headset jack connector

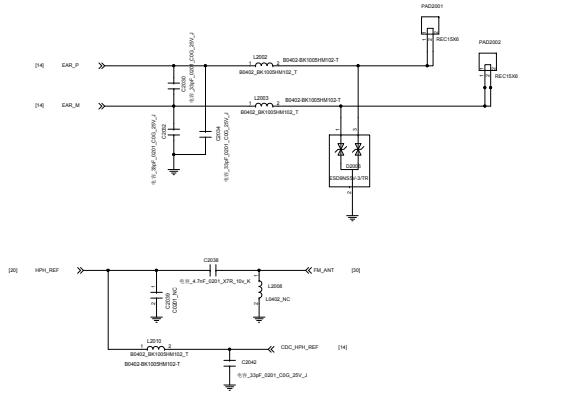

File	E7_MB_V1		
Size D	Document Number <Doc> Audio Interface		Rev V1.0

SIM1

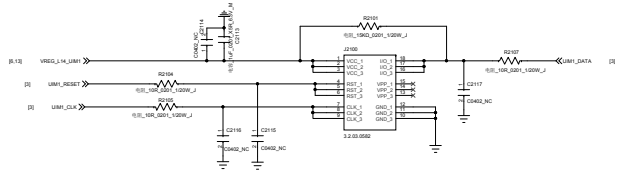

SIM2

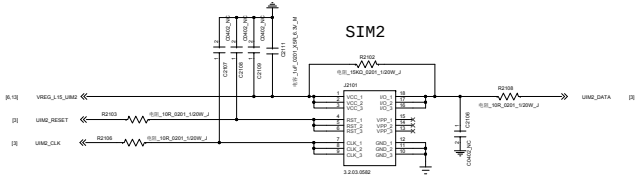

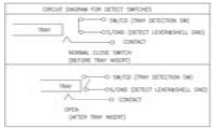

SD卡

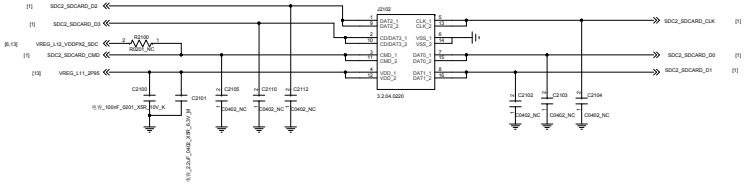

DETECT

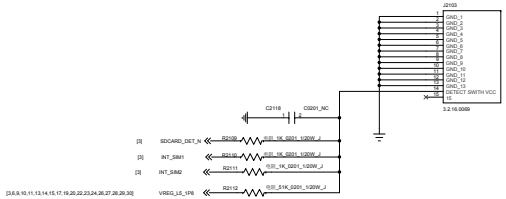

File	E7_MB_V1	
Size D	Document Number <Doc> SIM/TF card	Rev V1.0

Keys

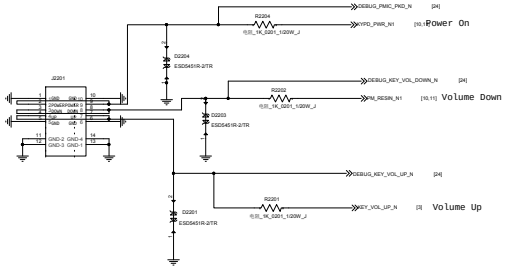

Signal	Description
KPSNS0	Volume Up
PM_RST_N	Volume Down
KYPD_PWR_N	PWER_ON

IR_LED

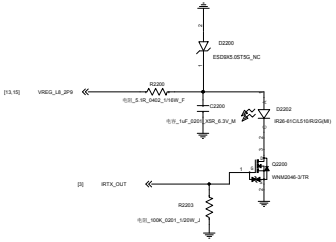

呼吸灯

I2C地址: 45h+r/w

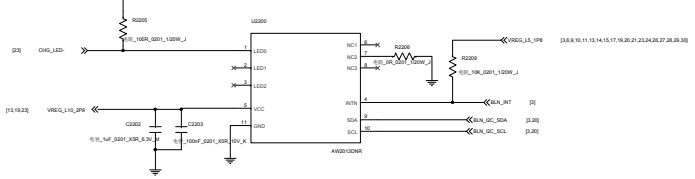

Title	E7_MB_V1	
Size	Document Number	Rev
D	<Doc> MSC(Keypad/LEDIndicator)	V1.0
Date: Wednesday, February 8, 2023	Sheet 36 of 38	

Battery Connector

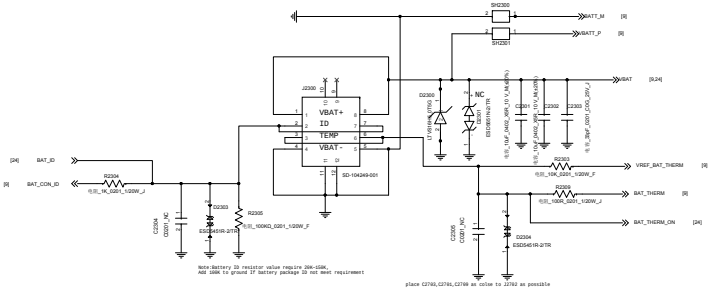

OVP 6.8V AW33205和WS3220C6-9/TR

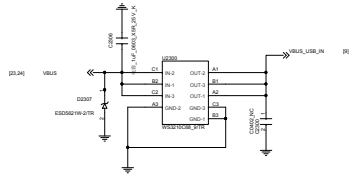

BTB Connector

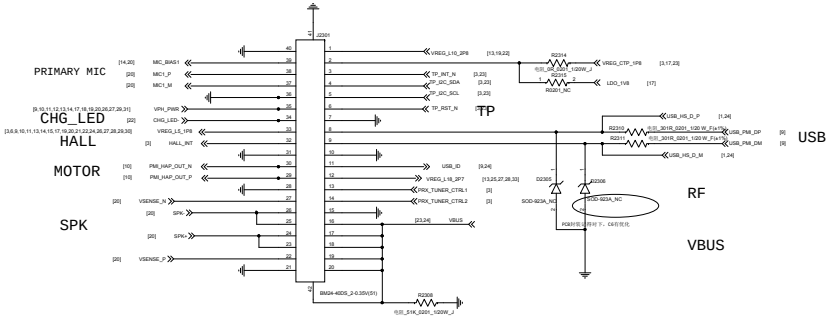

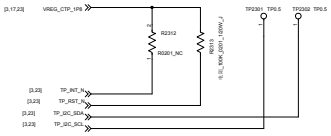

File	E7_MB_V1		
Size D	Document Number <Doc>		Rev V1.0

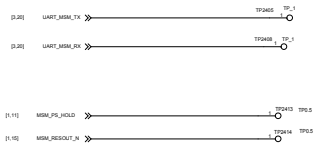

MARK POINT

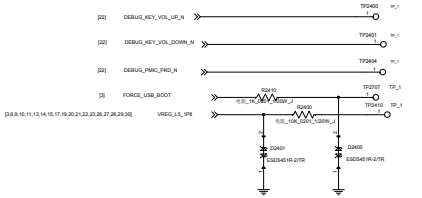

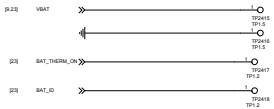

PCBA AUTOMATIC TEST point

Grounding

Shielding

Title	E7_MB_V1	
Size D	Document Number <Doc> TP/GND/Shielding	Rev V1.0

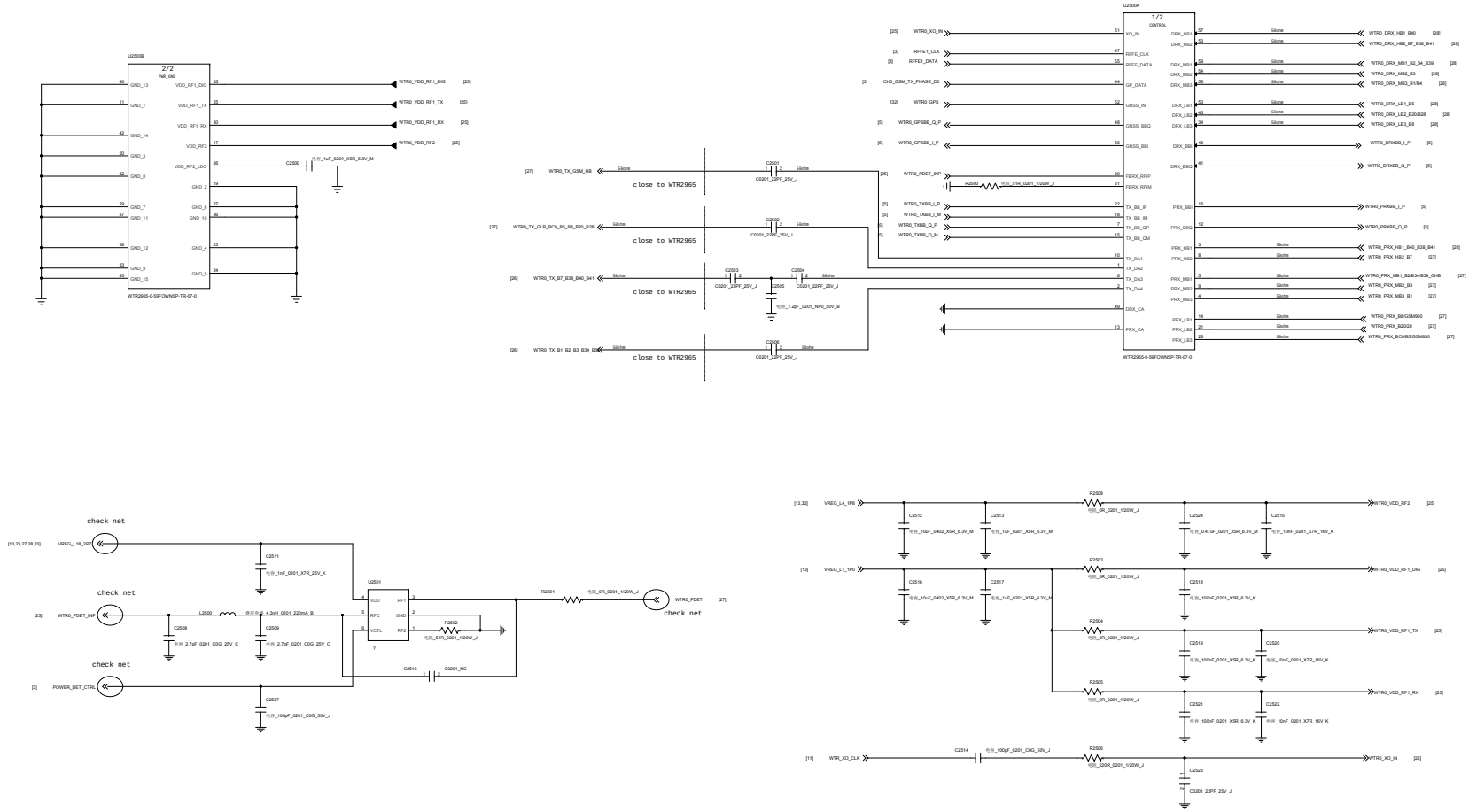

NOT TO BE USED, COPIED, REPRODUCED IN WHOLE OR IN PART, NOR ITS CONTENTS REVEALED IN ANY MANNER TO OTHERS WITHOUT THE EXPRESS WRITTEN PERMISSION OF QUALCOMM.

THIS TECHNICAL DATA MAY BE SUBJECT TO U.S. AND INTERNATIONAL EXPORT, RE-EXPORT OR TRANSFER ("EXPORT") LAWS. DIVERSION CONTRARY TO U.S. AND INTERNATIONAL LAW IS STRICTLY PROHIBITED.

Copyright (C) 2016 QUALCOMM Technologies,Inc.
All rights reserved

CONFIDENTIAL AND PROPRIETARY-QUALCOMM TECHNOLOGIES, INC.

QUALCOMM IS A REGISTERED TRADEMARK OF QUALCOMM INCORPORATED IN THE UNITED STATES AND MAY BE REGISTERED IN OTHER COUNTRIES. OTHER PRODUCT AND BRAND NAMES MAY BE TRADEMARKS OR REGISTERED TRADEMARKS OF THEIR RESPECTIVE OWNERS.

QUALCOMM Technologies,Inc.
5775 Morehouse Drive
San Diego, CA 92121-1714
U.S.A.

Title
87_MB_V1

Size | Sheet | Rev
D | LC00-P7505 | V1.0

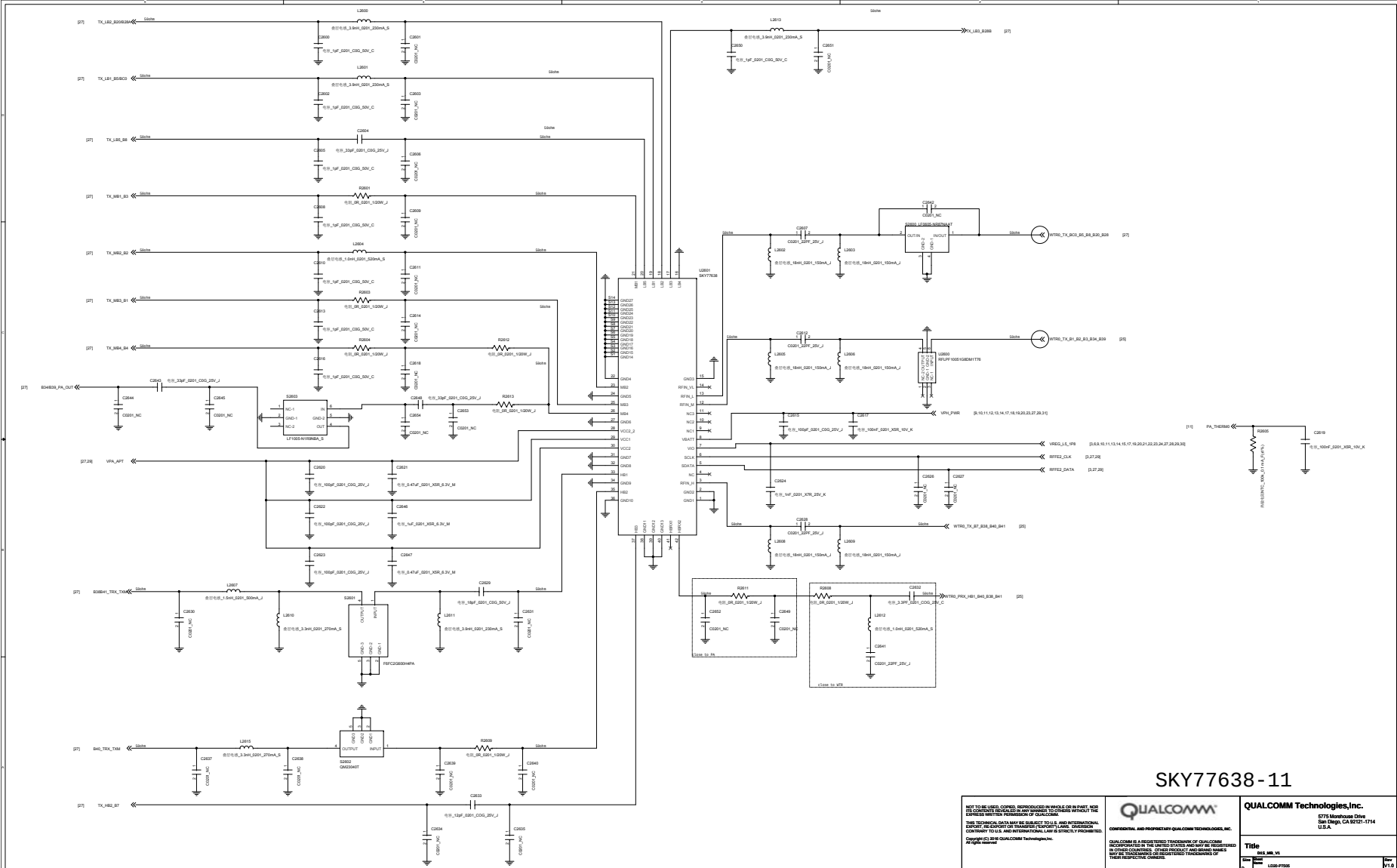
SKY77638-11
QUALCOMM Technologies,Inc.
5775 Morehouse Drive
San Diego, CA 92121-1714
U.S.A.
Title
DS2_MB_V1
Size
Sheet
L008-P0505
Rev
V1.0
NOT TO BE USED, COPIED, REPRODUCED IN WHOLE OR IN PART, NOR ITS CONTENTS REVEALED IN ANY MANNER TO OTHERS WITHOUT THE EXPRESS WRITTEN PERMISSION OF QUALCOMM.
THIS TECHNICAL DATA MAY BE SUBJECT TO U.S. AND INTERNATIONAL EXPORT, RE-EXPORT OR TRANSFER ("EXPORT") LAWS. DIVERSION CONTRARY TO U.S. AND INTERNATIONAL LAW IS STRICTLY PROHIBITED.
Copyright (C) 2016 QUALCOMM Technologies,Inc.
All rights reserved
QUALCOMM
CONFIDENTIAL AND PROPRIETARY-QUALCOMM TECHNOLOGIES, INC.
QUALCOMM IS A REGISTERED TRADEMARK OF QUALCOMM INCORPORATED IN THE UNITED STATES AND MAY BE REGISTERED IN OTHER COUNTRIES. OTHER PRODUCT AND BRAND NAMES MAY BE TRADEMARKS OR REGISTERED TRADEMARKS OF THEIR RESPECTIVE OWNERS.
U2601
SKY77638
U2800
LFB800_LF3605-N8E7NA-T
U2801
RFLPF10051G8DM1776
S2603
LF1005-N1R8NBA_S
S2601
FBFC2G600H4PA
S2602
GN0204IT
close to PA
close to WTR

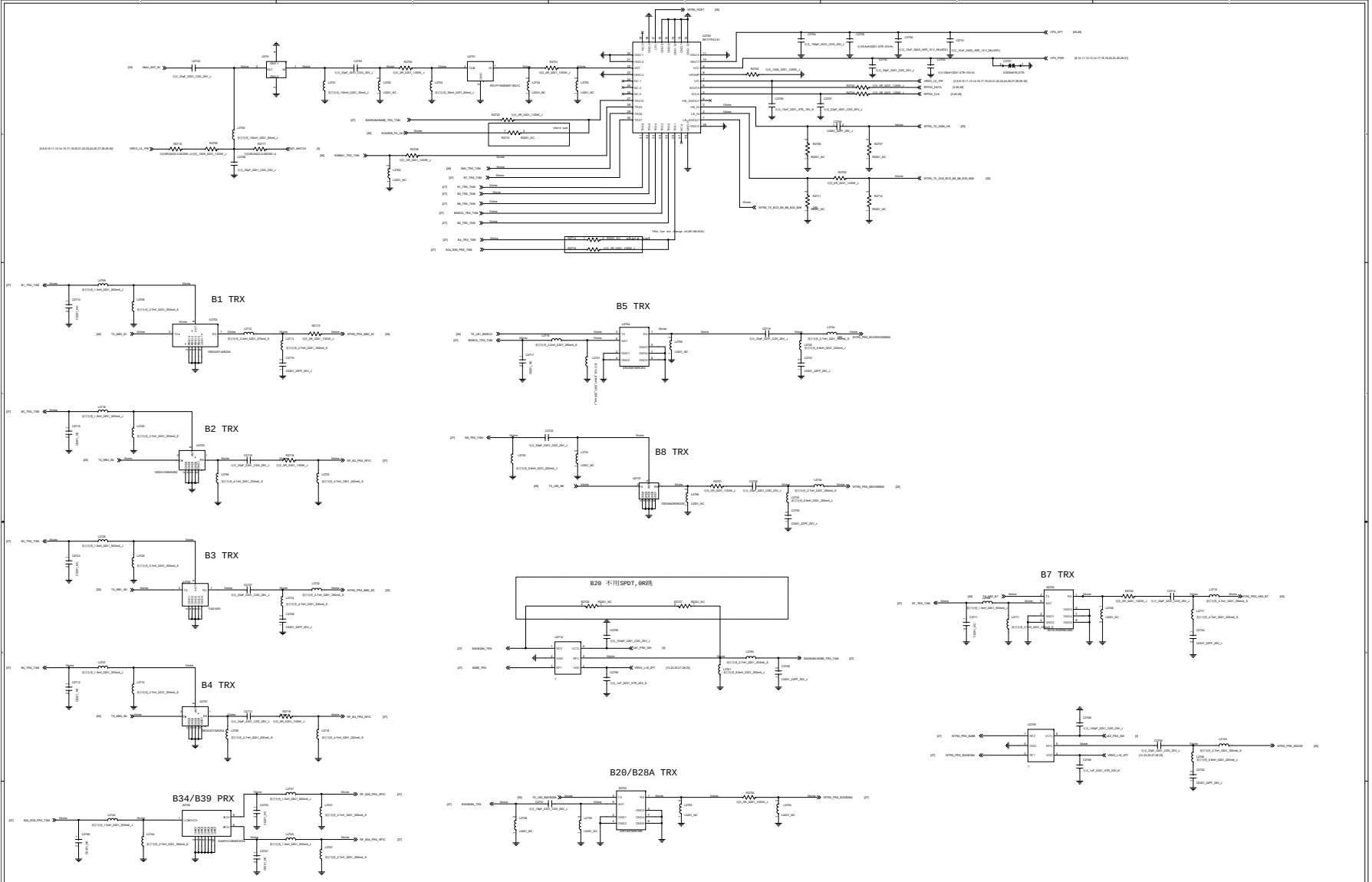
B1 TRX
B5 TRX
B2 TRX
B8 TRX
B3 TRX
B20 不用SPDT,0R跳
B7 TRX
B4 TRX
B34/B39 PRX
B20/B28A TRX

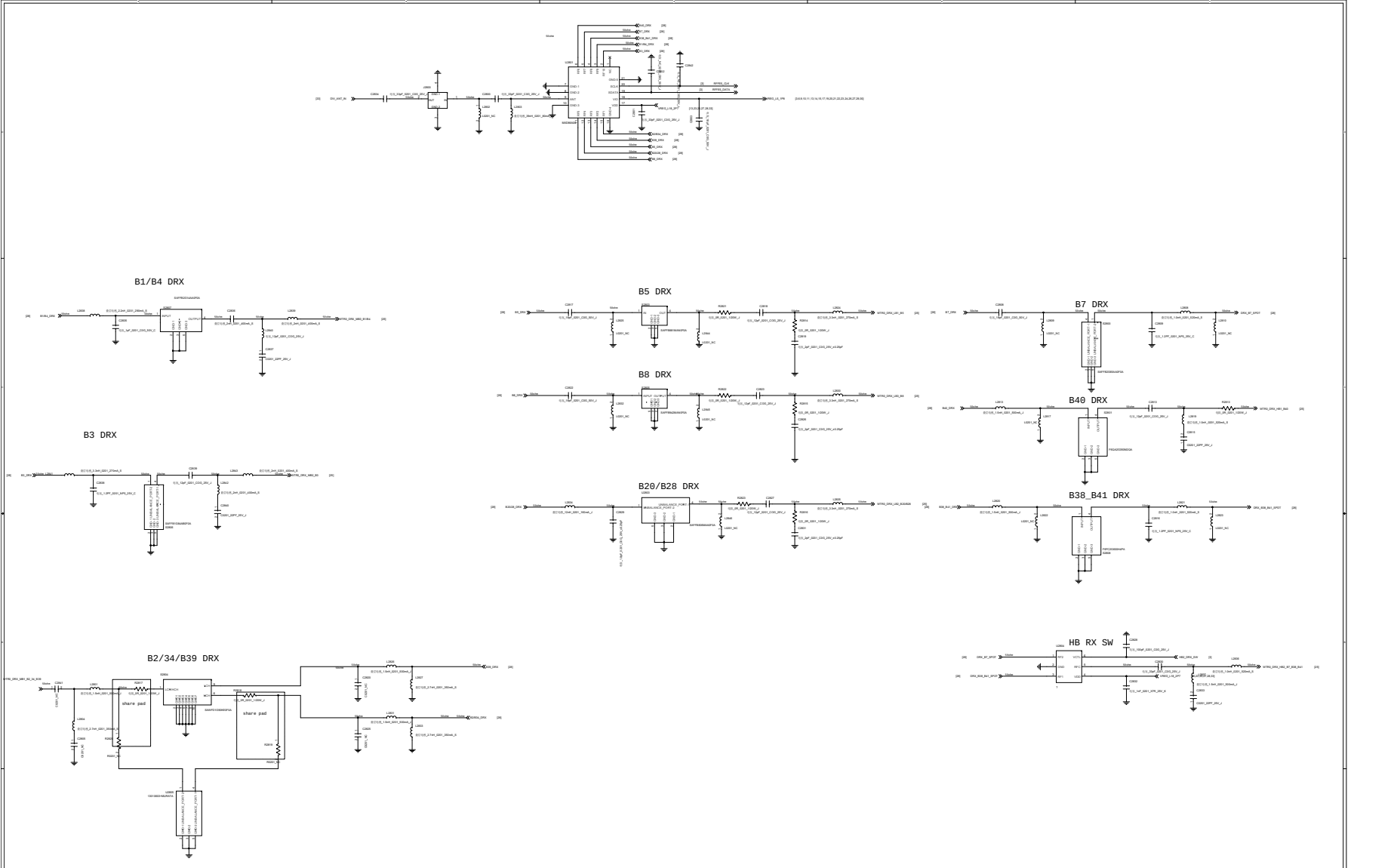
B1/B4 DRX
B5 DRX
B7 DRX
B8 DRX
B40 DRX
B3 DRX
B20/B28 DRX
B38_B41 DRX
B2/34/B39 DRX
HB RX SW
share pad
share pad

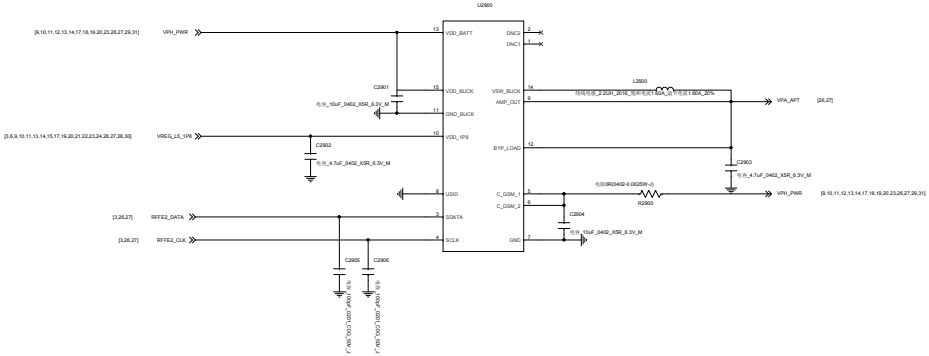

QFE2101

NOT TO BE USED, COPIED, REPRODUCED IN WHOLE OR IN PART, NOR ITS CONTENTS REVEALED IN ANY MANNER TO OTHERS WITHOUT THE EXPRESS WRITTEN PERMISSION OF QUALCOMM.

THIS TECHNICAL DATA MAY BE SUBJECT TO U.S. AND INTERNATIONAL EXPORT, RE-EXPORT OR TRANSFER ("EXPORT") LAWS. DIVERSION CONTRARY TO U.S. AND INTERNATIONAL LAW IS STRICTLY PROHIBITED.

Copyright (C) 2016 QUALCOMM Technologies,Inc.
All rights reserved

CONFIDENTIAL AND PROPRIETARY-QUALCOMM TECHNOLOGIES, INC.

QUALCOMM IS A REGISTERED TRADEMARK OF QUALCOMM INCORPORATED IN THE UNITED STATES AND MAY BE REGISTERED IN OTHER COUNTRIES. OTHER PRODUCT AND BRAND NAMES MAY BE TRADEMARKS OR REGISTERED TRADEMARKS OF THEIR RESPECTIVE OWNERS.

QUALCOMM Technologies,Inc.
5775 Morehouse Drive
San Diego, CA 92121-1714
U.S.A.

Title
DI2_MB_V1

Size	Board Name	Rev
D	LC20-P7935	V1.0

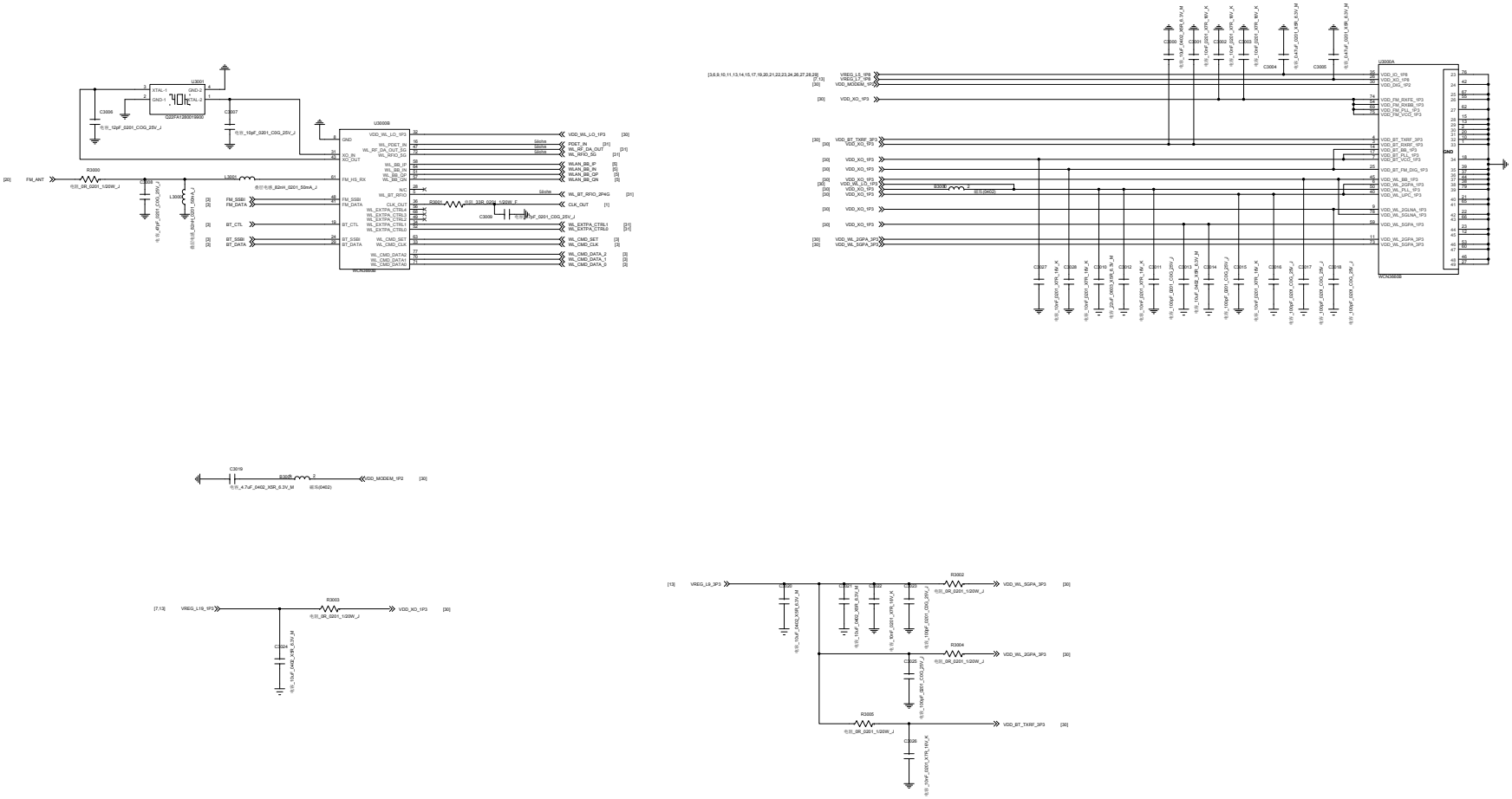

WCN3660B

NOT TO BE USED, COPIED, REPRODUCED IN WHOLE OR IN PART, NOR ITS CONTENTS REVEALED IN ANY MANNER TO OTHERS WITHOUT THE EXPRESS WRITTEN PERMISSION OF QUALCOMM.

THIS TECHNICAL DATA MAY BE SUBJECT TO U.S. AND INTERNATIONAL EXPORT, RE-EXPORT OR TRANSFER ("EXPORT") LAWS. DIVERSION CONTRARY TO U.S. AND INTERNATIONAL LAW IS STRICTLY PROHIBITED.

Copyright (C) 2016 QUALCOMM Technologies,Inc.
All rights reserved

CONFIDENTIAL AND PROPRIETARY-QUALCOMM TECHNOLOGIES, INC.

QUALCOMM IS A REGISTERED TRADEMARK OF QUALCOMM INCORPORATED IN THE UNITED STATES AND MAY BE REGISTERED IN OTHER COUNTRIES. OTHER PRODUCT AND BRAND NAMES MAY BE TRADEMARKS OR REGISTERED TRADEMARKS OF THEIR RESPECTIVE OWNERS.

QUALCOMM Technologies,Inc.
5775 Morehouse Drive
San Diego, CA 92121-1714
U.S.A.

Title
DI2_MB_V1

Size | Sheet | Rev
D | LD20-P7805 | V1.0

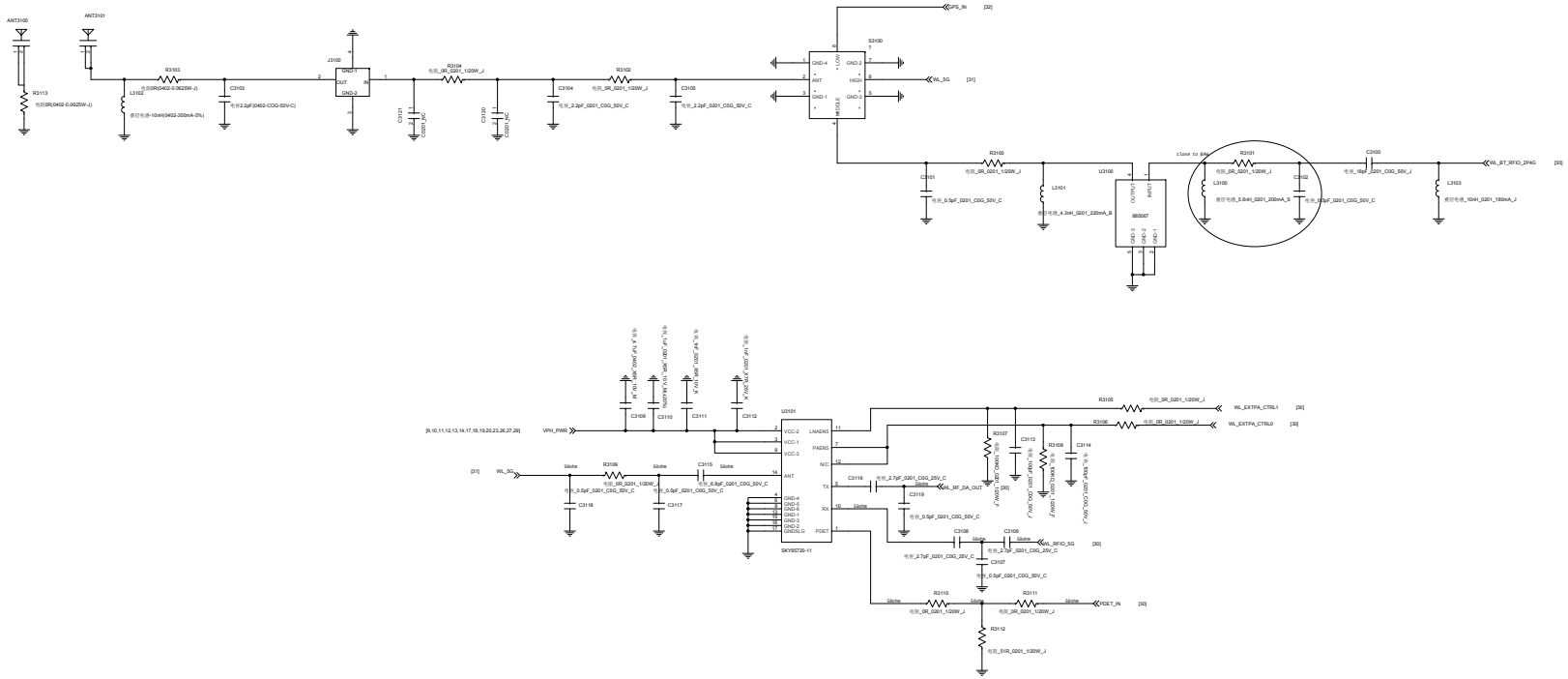

WLAN_FEM

NOT TO BE USED, COPIED, REPRODUCED IN WHOLE OR IN PART, NOR ITS CONTENTS REVEALED IN ANY MANNER TO OTHERS WITHOUT THE EXPRESS WRITTEN PERMISSION OF QUALCOMM.

THIS TECHNICAL DATA MAY BE SUBJECT TO U.S. AND INTERNATIONAL EXPORT, RE-EXPORT OR TRANSFER ("EXPORT") LAWS. DIVERSION CONTRARY TO U.S. AND INTERNATIONAL LAW IS STRICTLY PROHIBITED.

Copyright (C) 2016 QUALCOMM Technologies,Inc.
All rights reserved

CONFIDENTIAL AND PROPRIETARY-QUALCOMM TECHNOLOGIES, INC.

QUALCOMM IS A REGISTERED TRADEMARK OF QUALCOMM INCORPORATED IN THE UNITED STATES AND MAY BE REGISTERED IN OTHER COUNTRIES. OTHER PRODUCT AND BRAND NAMES MAY BE TRADEMARKS OR REGISTERED TRADEMARKS OF THEIR RESPECTIVE OWNERS.

QUALCOMM Technologies,Inc.
5775 Morehouse Drive
San Diego, CA 92121-1714
U.S.A.

Title
DS2_MB_V1

Size	Document	Rev
D	LC20-P7805	V1.0

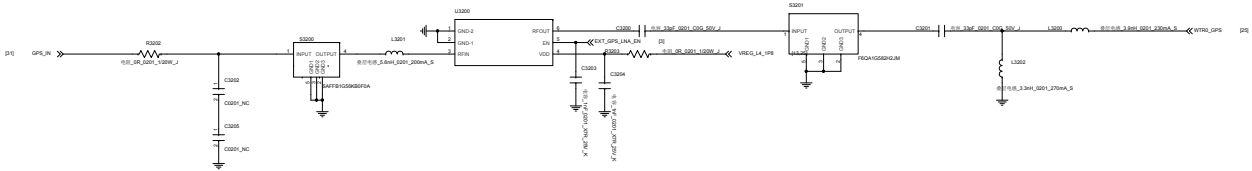

	extra S3201 option	Non-extra S3201 option
R3200	DNI	0ohm
R3201	DNI	0ohm
C3200	33pF	DNI
C3201	33pF	DNI
S3201	SAFFB1G56KB0F0A	DNI

GPS

NOT TO BE USED, COPIED, REPRODUCED IN WHOLE OR IN PART, NOR ITS CONTENTS REVEALED IN ANY MANNER TO OTHERS WITHOUT THE EXPRESS WRITTEN PERMISSION OF QUALCOMM.

THIS TECHNICAL DATA MAY BE SUBJECT TO U.S. AND INTERNATIONAL EXPORT, RE-EXPORT OR TRANSFER ("EXPORT") LAWS. DIVERSION CONTRARY TO U.S. AND INTERNATIONAL LAW IS STRICTLY PROHIBITED.

Copyright (C) 2016 QUALCOMM Technologies,Inc.
All rights reserved

CONFIDENTIAL AND PROPRIETARY-QUALCOMM TECHNOLOGIES, INC.

QUALCOMM IS A REGISTERED TRADEMARK OF QUALCOMM INCORPORATED IN THE UNITED STATES AND MAY BE REGISTERED IN OTHER COUNTRIES. OTHER PRODUCT AND BRAND NAMES MAY BE TRADEMARKS OR REGISTERED TRADEMARKS OF THEIR RESPECTIVE OWNERS.

QUALCOMM Technologies,Inc.
5775 Morehouse Drive
San Diego, CA 92121-1714
U.S.A.

Title
0x0_MB_V1

Size	Sheet	Rev
D	LCD0-P7935	V1.0

DPDT SWITCH

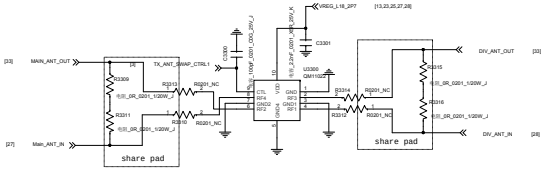

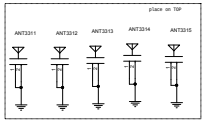

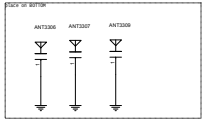

(VIETMOBILE.VN)

Main ANT

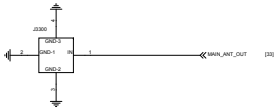

DIV ANT

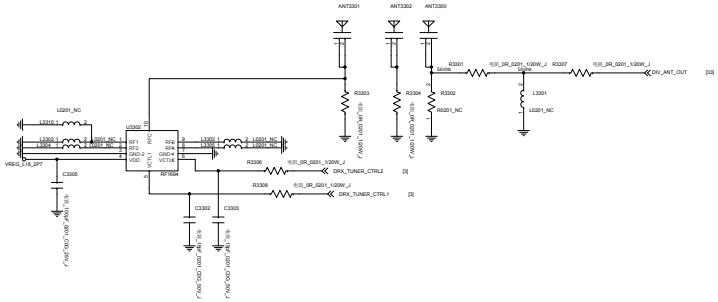

Title	«Title»	
Size	Document Number	Rev
D	«Doc»	«Rev»